Model AG3628 CORDLESS BLOWER

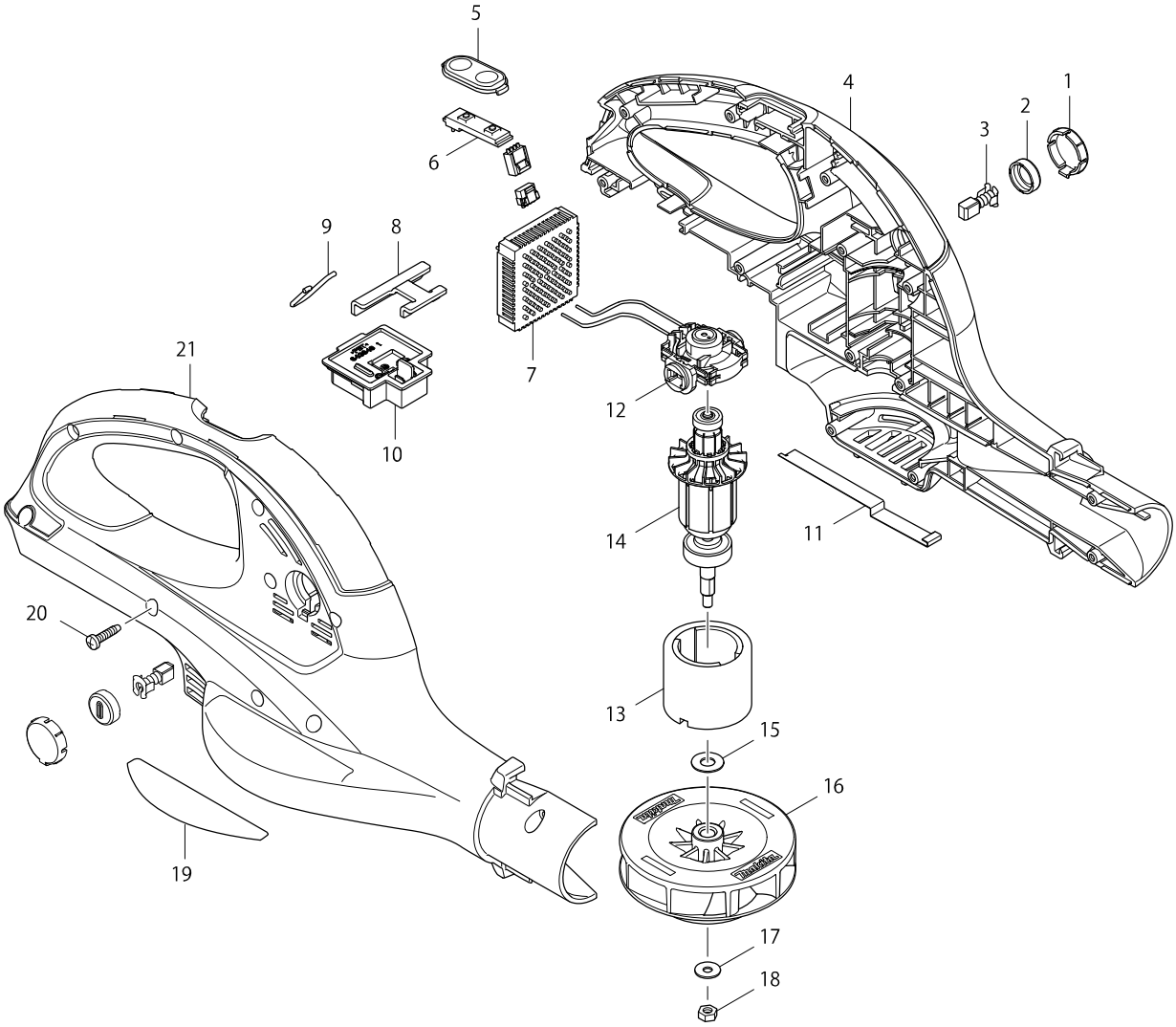

Model AG3628 CORDLESS BLOWER

Položka	Objednávacie	Popis	I/C	ks	N/O	Možnosť 1	Možnosť 2	Poznámka
001	452146-2	HOLDER CAP COVER		2				
002	643929-3	VIEČKO		2				
003	191971-3	UHLÍKY CB-430, 438 (CB-420)		1				
004	188937-2	HOUSING SET		1				
C10	263005-3	KOLÍK GUMA 6 2414		2				
C20	891050-4	CAUTION LABEL		1				
D10		INC. 21						
005	140463-9	SWITCH PLATE COMPLETE		1				
006	631973-2	SWITCH UNIT		1				
007-2	638860-6	CONTROLLER UNIT		1				
008	346039-2	SUPPORT PLATE		1				
009	325973-9	HANGER		1				
010	643849-1	TERMINAL		1				
011	346328-5	EARTH PLATE		1				
012	638725-2	ENDBELL COMPLETE		1				
013	638420-4	STATOR 220V BSC/BSS/BPB		1	*			
013-1	638420-4	STATOR 220V BSC/BSS/BPB	O	1				
014	619260-9	ARMATURE		1				
015	253865-1	PODLOŽKA 8		1				
016	240124-2	FAN 95		1				
017	253194-2	PODLOŽKA 5		1				
018	252177-9	HEX.NUT M5-8		1				
019	869780-5	AG-3628 NAME PLATE		1				
020	265995-6	SKRUTKA SAMOREZNÁ 4x18		13				
021	188937-2	HOUSING SET		1				
C10	263005-3	KOLÍK GUMA 6 2414		2				
C20	891050-4	CAUTION LABEL		1				
D10		INC. 4						
A01	166095-4	SHOULDER BELT		1				
A02	452124-2	LONG NOZZLE		1				
E01	688165-4	LINE FILTER		1				